PRELIMINARY
Notice: This is not a final specification.
Some parametric limits are subject to change.

MITSUBISHI Nch IGBT

CT60AM-18F

INSULATED GATE BIPOLAR TRANSISTOR

CT60AM-18F

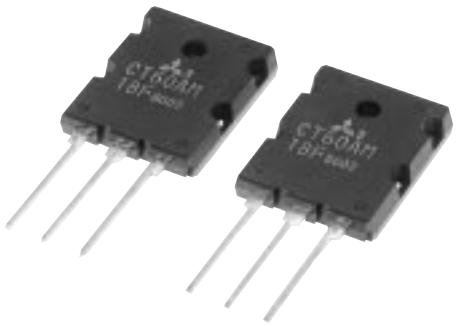

- V_{CES} 900V
- I_C 60A
- Simple drive
- Integrated Fast-recovery diode
- Small tail loss
- Low V_{CE} Saturation Voltage

OUTLINE DRAWING

Dimensions in mm

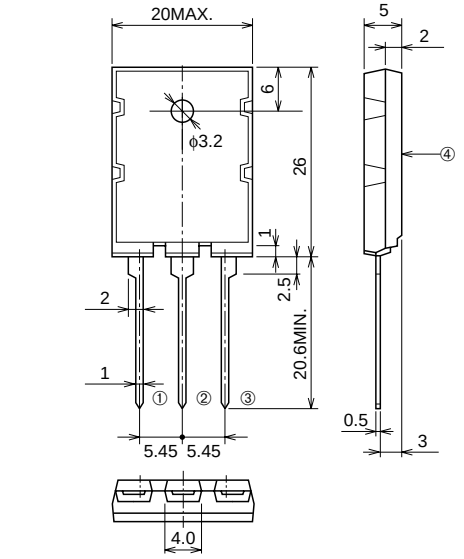

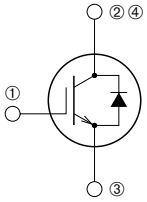

① GATE
② COLLECTOR
③ EMITTER
④ COLLECTOR

TO-3PL

APPLICATION

Microwave oven, Electromagnetic cooking devices, Rice-cookers, Voltage-resonant inverter circuit electric appliances

MAXIMUM RATINGS (T_C = 25°C)

Symbol	Parameter	Conditions	Ratings	Unit
V_{CES}	Collector-Emitter Voltage	V_{GE} = 0V	900	V
V_{GES}	Gate-Emitter Voltage		±25	V
V_{GEM}	Peak Gate-Emitter Voltage		±30	V
I_C	Collector Current		60	A
I_{CM}	Collector Current (Pulse)		120	A
I_E	Emitter Current		40	A
P_C	Maximum Power Dissipation		180	W
T_j	Junction Temperature		–40 ~ +150	°C
T_{stg}	Storage Temperature		–40 ~ +150	°C

PRELIMINARY
Notice: This is not a final specification.
Some parametric limits are subject to change.

ELECTRICAL CHARACTERISTICS (Tch = 25°C)

Symbol	Parameter	Test conditions	Limits			Unit
			Min.	Typ.	Max.	
I_{CES}	Collector cutoff current	V_{CE} = 900V, V_{GE} = 0V	—	—	1.0	mA
I_{GES}	Gate leakage current	V_{GE} = ±20V, V_{CE} = 0V	—	—	0.5	µA
$V_{GE(th)}$	Gate-emitter threshold voltage	V_{CE} = 10V, I_C = 6mA	2.0	4.0	6.0	V
$V_{CE(sat)}$	Collector-emitter saturation voltage	I_C = 60A, V_{CE} = 15V	—	2.1	2.7	V
C_{ies}	Input capacitance	V_{CE} = 25V, V_{GE} = 0V, f = 1MHz	—	4400	—	pF
C_{oes}	Output capacitance		—	115	—	pF
C_{res}	Reverse transfer capacitance		—	75	—	pF
$t_{d(on)}$	Turn-on deray time	V_{CC} = 300V, I_C = 60A, V_{GE} = 15V, R_G = 10Ω	—	0.05	—	µs
t_r	Turn-on rise time		—	0.1	—	µs
$t_{d(off)}$	Turn-off delay time		—	0.2	—	µs
t_f	Turn-off fall time		—	0.2	—	µs
Etail	Tail loss	I_{CP} = 60A, T_j = 125°C, dv/dt = 200V/µs		0.6	1.0	mJ/pls
Itail	Tail current			8	12	A
V_{EC}	Emitter-collector voltage	I_E = 60A, V_{GE} = 0V	—	2.2	3.0	V
t_{rr}	Diode reverse recovery time	I_E = 60A, dis/dt = –20A/µs	—	0.5	2.0	µs
$R_{th(j-c)}$	Thermal resistance (IGBT)	Junction to case	—	—	0.69	°C/W
$R_{th(j-c)}$	Thermal resistance (Diode)	Junction to case	—	—	4.0	°C/w